# LDDxPA2DUxx

## Loop Detector, DIN Rail Housing, Single or Dual Loop

### Description

LDD loop detector is well suited to be used in parking, drive through and car access control applications to control barriers, gates, bollards and car access equipment. Automatic frequency tuning and easy sensitivity adjustment enable easy setup and installation. Automatic sensitivity boost ensures high bed vehicles are detected reliably. Multicolor LED indication enables user to easily adjust loop inductance and intuitively indicate installation issues for easy diagnostic. Individually user-assigned relay mode for 2 x SPDT outputs enables easy adaptation to many applications. Directional logic in dual loop model can be used to ascertain vehicle direction.

### Main features

- Loop input inductance: 20 µH to 1000 µH
- Adjustable sensitivity in 10 steps: 0.01% to 1.00% via potentiometer
- Automatic loop frequency tuning or manual tuning via 4 adjustable loop frequency channels to avoid crosstalk
- Automatic Sensitivity Boost (ASB) for high bed vehicle detection
- Selectable fail safe and fail secure mode
- 2 x SPDT relay outputs, selectable operation as pulse or presence switching
- Multicolor power/fault LED indication for easy setup and intuitive diagnostic
- Individual loop state multicolor LED to indicate different loop status and fault.
- Loop diagnostic capability: loop short circuit, loop open circuit, inductance out of range, channel crosstalk.
- Directional logic for dual loop.
- Wide range power supply: 24-240 VAC/VDC, 45-65 Hz (LDDxPA2DU24) and 12-36 VAC/VDC, 45-65 Hz (LDDxPA2DU12).

### Main functions

- Opening and closing of barriers in a carpark. Output from loop detector can also be used to activate ticket machine and occupancy counting.
- Activation of bollards on the streets and any premise entrances/exits.
- Detecting vehicles at traffic light, tolls gantry and others.
- Directional logic to determine vehicle direction.
- Automatic Sensitivity Boost (ASB) function to detect high bed vehicles on the roads or in factories.
- Lighting activation in the car porch, carpark ramps and others.

# References

## Product selection key

LDD ☐ PA2D ☐

Enter the code option instead of ☐

| Code | Option | Description |
|---|---|---|
| L | - | Loop |
| D | - | Detector |
| D | - | DIN rail |
| ☐ | 1 | Number of loops |
| | 2 | Number of loops |
| P | - | Potentiometer |
| A | - | Adjustment |
| 2 | - | Number of outputs |
| D | - | 2 x SPDT outputs |
| ☐ | U24 | Power supply 24-240 VAC/VDC |
| | U12 | Power supply 12-36 VAC/VDC |

## Type selection

| Supply | Number of loops | Code |
|---|---|---|
| 24-240 VAC/VDC | 1 | LDD1PA2DU24 |
| 24-240 VAC/VDC | 2 | LDD2PA2DU24 |
| 12-36 VAC/VDC | 1 | LDD1PA2DU12 |
| 12-36 VAC/VDC | 2 | LDD2PA2DU12 |

# Structure

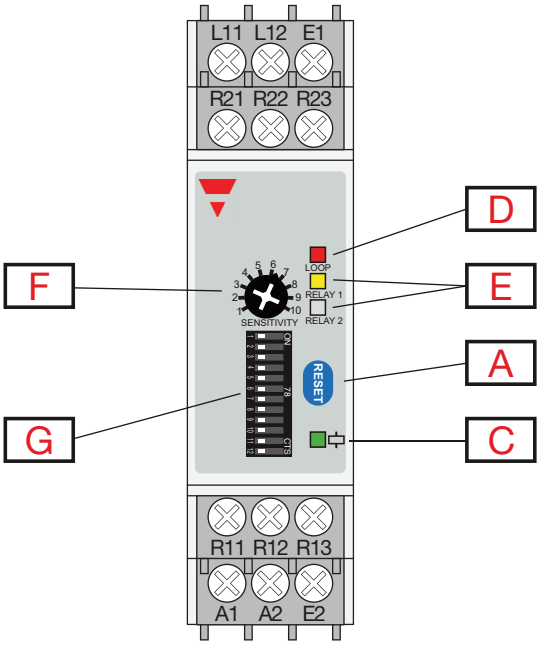


**Fig. 1** *LDD1*

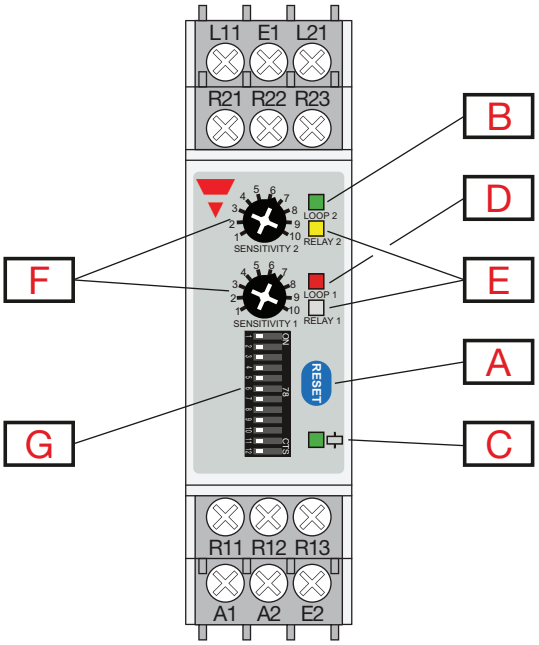


**Fig. 2** *LDD2*

| Element | Component |
|---|---|
| **A** | Reset button |
| **B** | Loop 2 state LED |
| **C** | Power/Fault LED |
| **D** | Loop state LED (LDD1); Loop 1 state LED (LDD2) |
| **E** | Relay state LED |
| **F** | Sensitivity potentiometer with 10 steps |
| **G** | Dip switches |

# Sensing

| | |
|---|---|
| **Loop input inductance** | 20 µH ... 1000 µH |
| **Adjustable sensitivity** | 0.01% ... 1.00% |
| **Number of adjustable steps** | 10 |
| **Number of frequency channels** | 4 |
| **Frequency range** | 10 ... 130 kHz |
| **Loop fault detection** | Short circuit, open circuit, inductance out of range, frequency crosstalk |
| **Response time** | 130 ms |

# Features

## Power Supply

| | |
|---|---|
| **Rated operational voltage ($U_B$)**<br>**LDDxPA2DU24**<br>**LDDxPA2DU12** | <br>24 ... 240 VAC/VDC<br>12 ... 36 VAC/VDC |
| **LDD1PA2DU24 power consumption** | 24 VAC/VDC < 2 W / 2.5 VA<br>115 VAC/VDC < 2 W / 3 VA<br>240 VAC/VDC < 2 W / 4 VA |
| **LDD2PA2DU24 power consumption** | 24 VAC/VDC < 2.5 W / 3.5 VA<br>115 VAC/VDC < 2.5 W / 4 VA<br>240 VAC/VDC < 2.5 W / 5 VA |
| **LDD1PA2DU12 power consumption** | 12 VAC/VDC < 2.5 W / 3 VA<br>36 VAC/VDC < 2 W / 3.5 VA |
| **LDD2PA2DU12 power consumption** | 12 VAC/VDC < 3 W / 3.5 VA<br>36 VAC/VDC < 2.5 W / 4 VA |
| **Rated supply frequency** | 45 ... 65 Hz |
| **Rated insulation voltage** | 800 V |
| **Rated impulse withstand voltage**<br>**LDDxPA2DU24**<br>**LDDxPA2DU12** | <br>4 kV (1.2/50 µs)<br>1 kV/2Ω (1.2/50 µs) |
| **Power-ON delay ($t_v$)** | < 5 s with manual frequency channel tuning<br>< 10 s with automatic frequency channel tuning |
| **Protection** | reverse polarity, overvoltage |

## Outputs

| | |
|---|---|
| **Output type** | Relay |
| **Number of outputs** | 2 x SPDT |
| **Output mode** | Pulse or presence; selectable via dip switch |
| **Rated operational voltage** | 250 VAC/VDC |
| **Rated operational current ($I_e$)** | AC1: 5A @ 250 VAC<br>DC1: 1A @ 30 VDC |
| **Mechanical lifetime** | 15 x $10^6$ |
| **Electrical lifetime** | >100 000 operations (@5A Load) |
| **Protection** | reverse polarity, transients |

## Indication

### Power / Fault indicator

| LED colour | LED constant | LED flashing |
|---|---|---|
| Green | All OK (ASB OFF) | DIP switch changed, but changes not in effect |
| Blue | All OK (ASB ON) | - |
| Yellow | Low signal indication | - |
| Red | Channel crosstalk | - |
| White | - | Indication of the frequency channel |

**Explanation:**
- Green LED (steady): Unit is powered up and everything is working well
- Green LED (flashing): Dip switch has been changed since power up, but change has not taken effect. Please press the reset button
- Blue LED (steady): Automatic Sensitivity Boost is turned ON and everything is working well
- Yellow LED (steady): Signal level is low in the loop. It is recommended to increase sensitivity
- Red LED (steady): Crosstalk of loop frequency with another loop detected. Select different frequency channel on DIP switches and reset product
- White LED (flashing): After start up, the number of times the LED flashes, indicates the frequency channel selected in both manual and automatic frequency tuning mode (e.g. LED flashes two times is equivalent to channel 2)

### Loop state LED

| LED colour | LED constant | LED flashing |
|---|---|---|
| Green | Inductance ok | |
| Yellow | Inductance too high | Inductance too low |
| Red | Loop is open circuit | Loop is short circuit |

**Explanation:**
- Green LED (steady): Loop inductance is within limit and working well
- Yellow LED (steady): Loop inductance is too high (more than 1000µH)
- Yellow LED (flashing): Loop inductance is too low (less than 20µH)
- Red LED (steady): Loop is open circuit
- Red LED (flashing): Loop is short circuit

### Relay state LED

| LED colour | Mode | Relay deactivated | Relay activated |
|---|---|---|---|
| Yellow | Presence mode | LED OFF | LED ON |
| | Pulse mode, 0.1 s | LED OFF | LED ON for 0.5 s |
| | Pulse mode, 0.5 s | LED OFF | LED ON for 1.0 s |

**Explanation:**
- Yellow LED (off): Relay is not activated
- Yellow LED (steady): Relay is activated and in presence mode
- Yellow LED (on for 0.5 s): Relay is activated and in pulse mode, 0.1 s
- Yellow LED (on for 1.0 s): Relay is activated and in pulse mode, 0.5 s

## DIP Switch

### DIP Switch settings for Single Loop (LDD1)

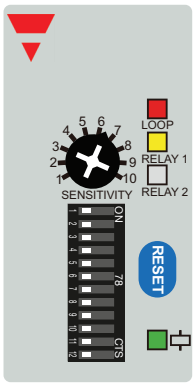


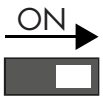


| | | | | | | | |
|---|---|---|---|---|---|---|---|
| **Frequency settings** | | | | | | | |
| 1 | Mode | Automatic channel selection | | Manual channel selection | | | |
| 2<br>3 | Channel | DIP switch 2 and 3 are not used in automatic channel selection | | 1 | 2 | 3 | 4 |
| **General settings** | | | | | | | |
| 4 | Turn-on delay | Delay OFF | | Delay 2.0 s | | | |
| 5 | ASB | ASB OFF | | ASB ON | | | |
| 6 | Failure mode | Fail safe | | Fail secure | | | |
| **Relay 1 settings** | | | | | | | |
| 7 | Output mode | Pulse mode | | Presence mode | | | |
| 8 | Time | 0.1 s pulse | 0.5 s pulse | Infinite | 1 h | 10 m | 1 m |
| 9 | Entry / Exit | Vehicle entry | Vehicle exit | | | | |
| **Relay 2 settings** | | | | | | | |
| 10 | Output mode | Pulse mode | | Presence mode | | | |
| 11 | Time | 0.1 s pulse | 0.5 s pulse | Infinite | 1 h | 10 m | 1 m |
| 12 | Entry / Exit | Vehicle entry | Vehicle exit | | | | |

### DIP SWITCH 1 - Frequency mode selection

The loop detector operates on one out of four channels. If the loop detector is located near sources of electrical or magnetic disturbances, e.g. from other loop detectors, some channels can be more advantageous to use than others. Two loop detectors placed in close proximity of each other should use different channels to avoid crosstalk between the loops.

- When DIP SWITCH 1 is set to **ON**, the user manually selects which channel is used by setting DIP switch 2 and 3.
- When DIP SWITCH 1 is set to **OFF**, during startup the loop detector automatically measures disturbances present on all four channels and selects the channel with best signal conditions. Note that this procedure will be performed every time the loop detector is powered up or reset.

The white LED will show which channel has been selected (refer to the Indication Session on page 5).

### DIP SWITCH 2 and 3 - Frequency channel selection

These two DIP switches are used to select which channel the loop detector should use. The channels can only be selected when manual channel selection is set on DIP switch 1. When mode is set to automatic channel selection, DIP switch 2 and 3 do not have any function.

| DIP switch | Frequency Channel 1 | Frequency Channel 2 | Frequency Channel 3 | Frequency Channel 4 |
|---|---|---|---|---|
| 2 | OFF | ON | OFF | ON |
| 3 | OFF | OFF | ON | ON |

### DIP SWITCH 4 - Turn-on delay

The loop detector has a Turn-on delay filter which can be enabled to help to avoid false vehicle detections.

- When DIP SWITCH 4 is set to **ON**, the Turn-on delay is activated and any detections shorter than 2 seconds will not cause the output to activate. This function is suitable for detection of stationary or slow moving vehicles.
- When DIP SWITCH 4 is set to **OFF**, the Turn-on delay is disabled and output has normal response time. This function is suitable for detection of fast moving vehicles.

### DIP SWITCH 5 - Automatically Sensitivity Boost (ASB)

High bed vehicles such as trucks and trailers normally gives a strong signal when the wheel axles are inside the circumference of the loop. However the signal drops significantly when the loop is between the wheel axles or between a truck and its trailer. When ASB function is enabled, the sensitivity is boosted to avoid output deactivation when signal level is reduced, but high bed vehicle is still on top of the loop.

- When DIP SWITCH 5 is set to **ON**, the ASB function is active and sensitivity is boosted to avoid false deactivations. This mode is recommended for applications where detection of trucks and other high bed vehicles is needed.
- When DIP SWITCH 5 is set to **OFF**, the loop detector uses normal sensitivity levels. This mode is recommended for detection of normal cars, vans etc. with low bed height.

### DIP SWITCH 6 - Failure mode

This function determines the state of the output relays, both during normal operation and when a failure is detected in the system.

⚠ **Note:** When Fail Safe mode is selected, the operation of both output relays will be inverted. This means that the Normally Open (NO) contact will become a Normally Closed (NC) contact and the Normally Closed (NC) contact will become a Normally Open (NO) contact.

- When DIP SWITCH 6 is set to **ON**, the product will operate in FAIL SECURE mode. In case of a failure on the loop detector, in the loop wire or loss of power, the outputs will indicate no detection of a vehicle.
- When DIP SWITCH 6 is set to **OFF**, the product will operate in FAIL SAFE mode. In case of a failure on the loop detector, in the loop wire or loss of power, the outputs will indicate detection of a vehicle.

## Failure mode operation

### Failure mode set to secure

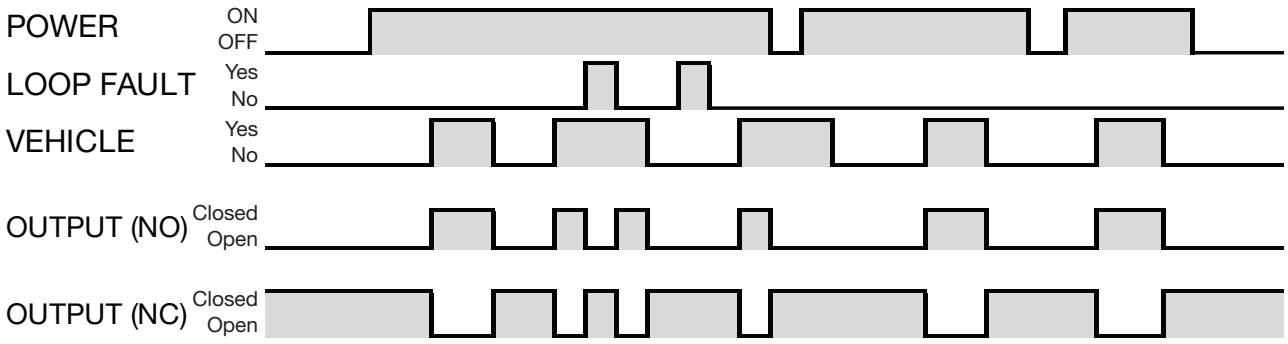


### Failure mode set to safe

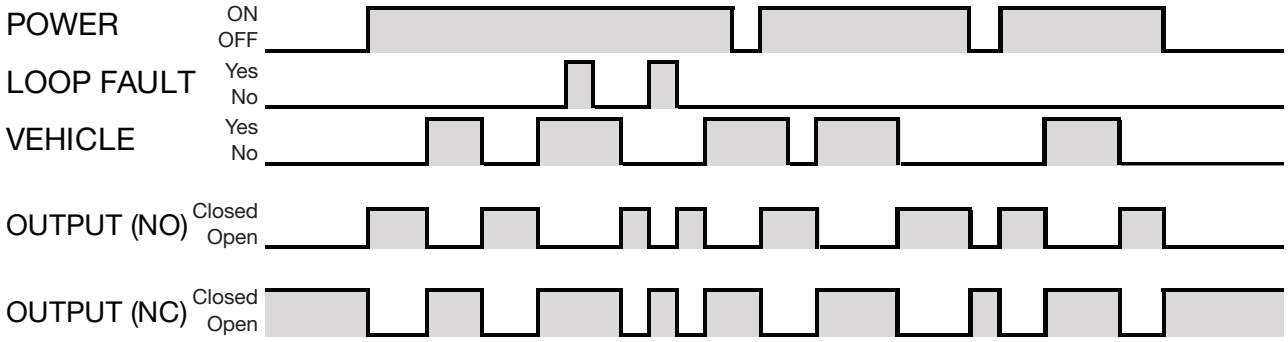


**DIP SWITCH 7 - Output mode for relay 1**
This setting determines how relay 1 should indicate a vehicle detection in the loop. The loop detector can generate a single pulse, each time a vehicle enters or leaves the loop (Pulse mode). Alternatively the output can be keept activate as long as there is a vehicle present inside the loop (Presence mode).

- When DIP SWITCH 7 is set to **ON** relay 1 operates in Presence mode and output is activated as long as a vehicle is present inside the loop.
- When DIP SWITCH 7 is set to **OFF** relay 1 operates in Pulse mode and generates a pulse each time a vehicle enters or leaves the loop.

⚠ **Note:** DIP switch 8 and 9 will have different functionality depending if product is set to operate in Pulse or Presence mode on DIP switch 7.

**DIP SWITCH 8 - Time setting for relay 1 (only for Pulse mode)**
When the loop detector is operating in Pulse mode (see DIP switch 7), the pulse length can be changed with DIP switch 8.

- When DIP SWITCH 8 is set to **ON** relay 1 creates a pulse with a duration of 0.5 s for each activation.
- When DIP SWITCH 8 is set to **OFF** relay 1 creates a pulse with a duration of 0.1 s for each activation.

**DIP SWITCH 9 - Entry or Exit mode for relay 1 (only for Pulse mode)**
When the loop detector is operating in Pulse mode (see DIP switch 7), the output pulse can be generated either when a vehicle enters the loop or when a vehicle exits the loop. This is selected by DIP switch 9.

- When DIP SWITCH 9 is set to **ON** relay 1 creates a pulse each time a vehicle exits the loop.
- When DIP SWITCH 9 is set to **OFF** relay 1 creates a pulse each time a vehicle enters the loop.

**DIP SWITCH 8 & 9 - Timeout setting for relay 1 (only for Presence mode)**
When relay 1 is operated in Presence mode (see DIP switch 7), a timeout can be set to limit maximum activation time of a single vehicle detection. If timeout is set different from infinite, the output will automatically deactivate, if a vehicle has been constantly detected for longer time than set by DIP switch 8 and 9.

| DIP switch | Infinite | 1 hour | 10 minutes | 1 minute |
|---|---|---|---|---|
| 8 | OFF | ON | OFF | ON |
| 9 | OFF | OFF | ON | ON |

**DIP SWITCH 10 - Output mode for relay 2**
This setting determines how relay 2 should indicate a vehicle detection in the loop. The loop detector can generate a single pulse each time a vehicle enters or leaves the loop (Pulse mode). Alternatively the output can be keept activate as long as there is a vehicle present inside the loop (Presence mode).

- When DIP SWITCH 10 is set to **ON** relay 2 operates in Presence mode and output is activate as long as a vehicle is present inside the loop.
- When DIP SWITCH 10 is set to **OFF** relay 2 operates in Pulse mode and generates a pulse each time a vehicle enters or leaves the loop.

⚠ **Note:** DIP switch 11 and 12 will have different functionality depending if product is set to operate in Pulse or Presence mode on DIP switch 10.

**DIP SWITCH 11 - Time setting for relay 2 (only for Pulse mode)**
When the loop detector is operated in Pulse mode (see DIP switch 10), the pulse length can be changed with DIP switch 11.

- When DIP SWITCH 11 is set to **ON** relay 2 creates a pulse with a duration of 0.5 s for each activation.
- When DIP SWITCH 11 is set to **OFF** relay 2 creates a pulse with a duration of 0.1 s for each activation.

**DIP SWITCH 12 - Entry or Exit mode for relay 2 (only for Pulse mode)**
When the loop detector is operated in Pulse mode (see DIP switch 10), the output pulse can be generated either when a vehicle enters the loop or when a vehicle exits the loop. This is selected with DIP switch 12.

- When DIP SWITCH 12 is set to **ON** relay 2 creates a pulse each time a vehicle exits the loop.
- When DIP SWITCH 12 is set to **OFF** relay 2 creates a pulse each time a vehicle enters the loop.

**DIP SWITCH 11 & 12 - Timeout setting for relay 2 (only for Presence mode)**
When relay 2 is operated in Presence mode (see DIP switch 10), a timeout can be set to limit maximum activation time of a single vehicle detection. If timeout is set different from infinite, the output will automatically deactivate, if a vehicle has been constantly detected for longer time than set by DIP switch 11 and 12.

| DIP switch | Infinite | 1 hour | 10 minutes | 1 minute |
|---|---|---|---|---|
| 11 | OFF | ON | OFF | ON |
| 12 | OFF | OFF | ON | ON |

## DIP Switch settings for Dual Loop (LDD2)

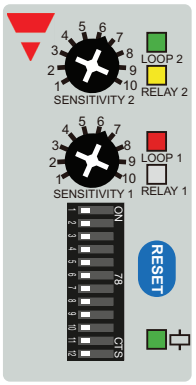


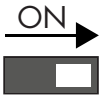


| | | | | | | |
|---|---|---|---|---|---|---|
| **Frequency settings** | | | | | | |
| 1 | Mode | Automatic channel selection | | Manual channel selection | | |
| 2<br>3 | Channel | DIP switch 2 and 3 are not used in automatic channel selection | | 1 | 2 | 3 | 4 |
| **General settings** | | | | | | |
| 4 | Turn-on delay | Delay OFF | | Delay 2.0 s | | |
| 5 | ASB | ASB OFF | | ASB ON | | |
| 6 | Failure mode | Fail safe | | Fail secure | | |
| **Relay 1 settings** | | | | | | |
| 7 | Output mode | Pulse mode | | Presence mode | | |
| 8 | Mode select | Vehicle entry | Vehicle exit | Infinite | 1 m | |
| **Relay 2 settings** | | | | | | |
| 9 | Output mode | Pulse mode | | Presence mode | | |
| 10 | Mode select | Vehicle entry | Vehicle exit | Infinite | 1 m | |
| **Relay 1 & 2 settings** | | | | | | |
| 11 | Pulse duration | 0.1 s | 0.5 s | Not used in Presence mode | | |
| 12 | Direction logic | OFF | | ON | | |

**DIP SWITCH 1 to 6**
For explanation of functions set by DIP switch 1 to 6, see description for Single Loop Detector (LDD1).

**DIP SWITCH 7 - Output mode for relay 1**
This setting determines how relay 1 should indicate a vehicle detection in the loop. The loop detector can generate a single pulse each time a vehicle enters or leaves the loop (Pulse mode). Alternatively the output can be kept activated as long as there is a vehicle present inside the loop (Presence mode).

- When DIP SWITCH 7 is set to **ON** relay 1 operates in Presence mode and output is activate as long as a vehicle is present inside the loop.
- When DIP SWITCH 7 is set to **OFF** relay 1 operates in Pulse mode and generates a pulse each time a vehicle enters or leaves the loop.

⚠ **Note:** DIP switch 8 will have different functionality depending if product is set to operate in pulse or presence mode on DIP switch 7.

**DIP SWITCH 8 - Mode select for relay 1 (only for Pulse mode)**
When the loop detector is operating in Pulse mode (see DIP switch 7), the output pulse can be generated either when a vehicle enters the loop or when a vehicle exits the loop. This is selected by DIP switch 8.

- When DIP SWITCH 8 is set to **ON**, relay 1 creates a pulse each time a vehicle exits the loop.
- When DIP SWITCH 8 is set to **OFF**, relay 1 creates a pulse each time a vehicle enters the loop.

**DIP SWITCH 8 - Timeout setting for relay 1 (only for Presence mode)**
When relay 1 is operating in Presence mode (see DIP switch 7), a timeout can be set to limit maximum activation time of a single vehicle detection. If timeout is set different from infinite, the output will automatically deactivate, if a vehicle has been constantly detected for longer time than set by DIP switch 8.

- When DIP SWITCH 8 is set to **ON** relay 1 timeout is set to 1 minute.
- When DIP SWITCH 8 is set to **OFF** relay 1 timeout is set to infinite.

**DIP SWITCH 9 - Output mode for relay 2**
This setting determines how relay 2 should indicate a vehicle detection in the loop. The loop detector can generate a single pulse each time a vehicle enters or leaves the loop (Pulse mode). Alternatively the output can be keept activate as long as there is a vehicle present inside the loop (Presence mode).

- When DIP SWITCH 9 is set to **ON** relay 2 operates in Presence mode and output is activate as long as a vehicle is present inside the loop.
- When DIP SWITCH 9 is set to **OFF** relay 2 operates in Pulse mode and generates a pulse each time a vehicle enters or leaves the loop.

⚠ **Note:** DIP switch 10 will have different functionality depending if product is set to operate in Pulse or Presence mode on DIP switch 9.

**DIP SWITCH 10 - Mode Select for relay 2 (only for Pulse mode)**
When the loop detector is operating in Pulse mode (see DIP switch 9), the output pulse can be generated either when a vehicle enters the loop or when a vehicle exits the loop. This is selected with DIP switch 10.

- When DIP SWITCH 10 is set to **ON** relay 2 creates a pulse each time a vehicle exits the loop.
- When DIP SWITCH 10 is set to **OFF** relay 2 creates a pulse each time a vehicle enters the loop.

**DIP SWITCH 10 - Timeout setting for relay 2 (only for Presence mode)**
When relay 2 is operating in Presence mode (see DIP switch 9), a timeout can be set to limit maximum activation time of a single vehicle detection. If timeout is set different from infinite, the output will automatically deactivate, if a vehicle has been constantly detected for longer time than set by DIP switch 10.

- When DIP SWITCH 10 is set to **ON** relay 2 timeout is set to 1 minute.
- When DIP SWITCH 10 is set to **OFF** relay 2 timeout is set to infinite.

**DIP SWITCH 11 - Pulse Duration setting (only for Pulse mode)**
When the loop detector is operating in Pulse mode on relay 1 and/or relay 2, the pulse length can be set with DIP switch 11.

⚠ **Note:** The duration setting changes pulse length of both relay 1 and relay 2, if they are both operated in pulse mode. If both relays are operated in Presence mode, DIP switch 11 does not have any functionality.

- When DIP SWITCH 11 is set to **ON**, relay creates a pulse with a duration of 0.5 s for each activation.
- When DIP SWITCH 11 is set to **OFF**, relay creates a pulse with a duration of 0.1 s for each activation.

**DIP SWITCH 12 - Direction logic**
The directional logic function can be used to count vehicles in and out of a parking area. When this function is activated, the relays indicate which direction the vehicle was traveling.

- When DIP SWITCH 12 is set to **ON**, Direction logic is enabled. Relay 1 will activate when a vehicle first drives inside loop 1 and then loop 2. Relay 2 will activate when a vehicle first drives inside loop 2 and then loop 1.
- When DIP SWITCH 12 is set to **OFF**, Direction logic is disabled. Relay 1 will activate when a vehicle is detected in loop 1 and relay 2 will activate when a vehicle is detected in loop 2.

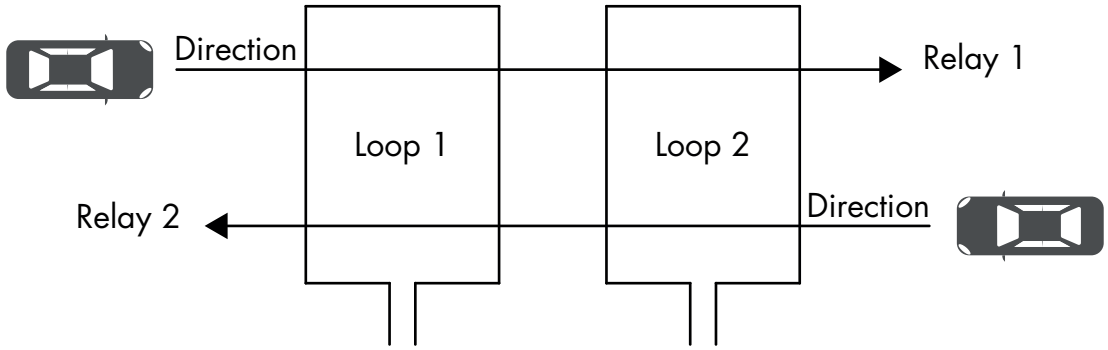


## Environmental

| | | |
|---|---|---|
| **Ambient temperature** | -40° ... +70°C (-40° ... +158°F) | Operating |
| | -40° ... +70°C (-40° ... +158°F) | Storage |
| **Ambient humidity range** | 0% ... 90% | Operating |
| | 0% ... 90% | Storage |
| **Overvoltage category** | III | IEC |
| **Degree of protection** | IP20 | IEC |
| **Pollution degree** | 2 | IEC |

# Mechanics/electronics

## Connection

| Connection type | Screw terminal |
|---|---|

## Wiring

### Single loop (LDD1)

| | | | |
|---|---|---|---|
| **L11** | Loop | **R11** | Relay 1 Normally Open (NO) |
| **L12** | Loop | **R12** | Relay 1 Normally Closed (NC) |
| **E1** | Earth | **R13** | Relay 1 Common (COM) |
| **R21** | Relay 2 Normally Open (NO) | **A1** | Supply |
| **R22** | Relay 2 Normally Closed (NC) | **A2** | Supply |
| **R23** | Relay 2 Common (COM) | | |

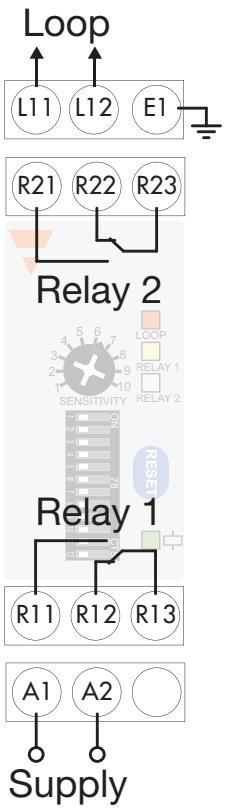

## Dual loop (LDD2)

| | | | |
|---|---|---|---|
| **L11** | Loop 1 | **R11** | Relay 1 Normally Open (NO) |
| **E1** | Loop 1, 2, Earth | **R12** | Relay 1 Normally Closed (NC) |
| **L21** | Loop 2 | **R13** | Relay 1 Common (COM) |
| **R21** | Relay 2 Normally Open (NO) | **A1** | Supply |
| **R22** | Relay 2 Normally Closed (NC) | **A2** | Supply |
| **R23** | Relay 2 Common (COM) | | |

## Housing

| | | |
|---|---|---|
| **???** | PPO PX9406-802, PPO Noryl SE1 | |
| **Colour** | RAL 7035 (Grey) | |
| **Dimensions** | 84 mm (h) x 22 mm (w) x 99 mm (d) | |
| **Weight** | LDD1 | 134 g |
| | LDD2 | 139 g |

## Dimensions (mm)

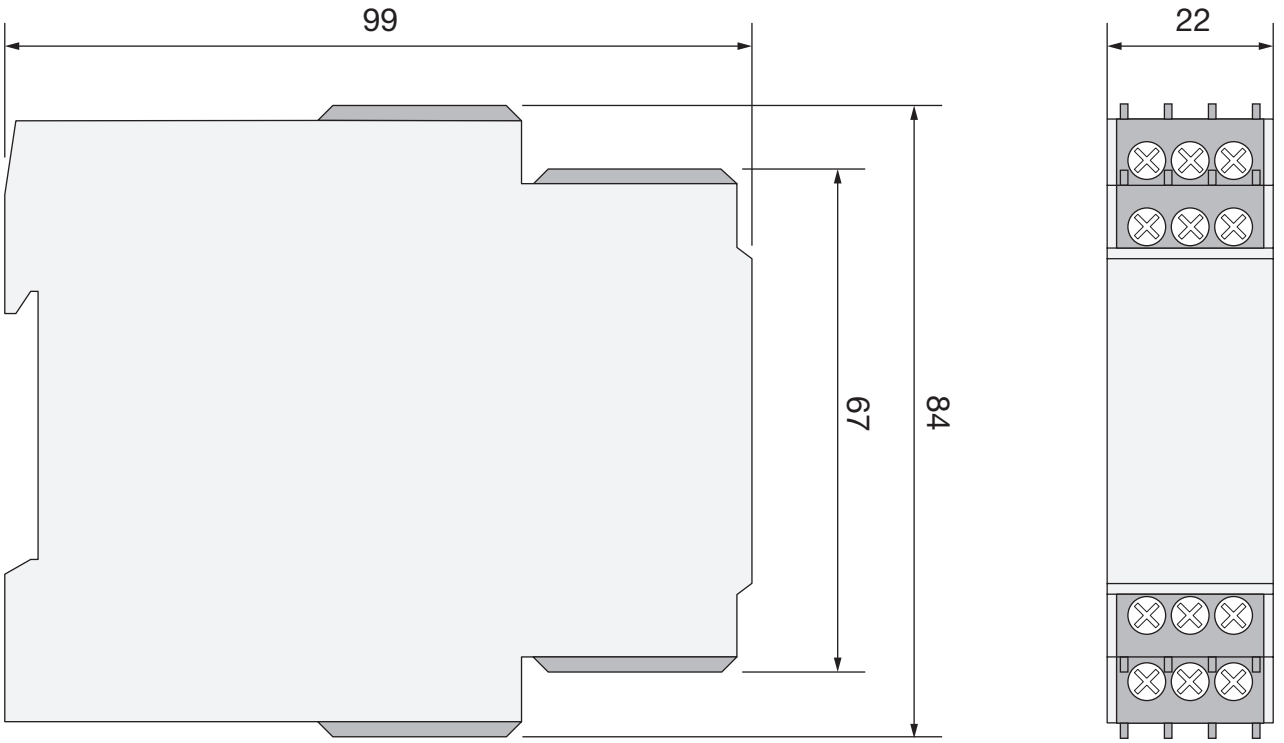

# Compatibility and conformity

## Approvals and markings

| | |
|---|---|
| **CE-marking** | CE |
| **Approvals**<br>**Only LDDxPA2DU24** | (UL508) |
| **MTTF$_d$** | LDD1: 277 years @ 50°C (122°F)<br>LDD2: 249 years @ 50°C (122°F) |

# Delivery contents and accessories

## Delivery contents

- Loop detector: LDD

## Further information

| Information | Where to find it | QR |
|---|---|---|
| Manual | http://cga.pub/?50037a | |

COPYRIGHT ©2022
Content subject to change. Download the PDF: www.gavazziautomation.com